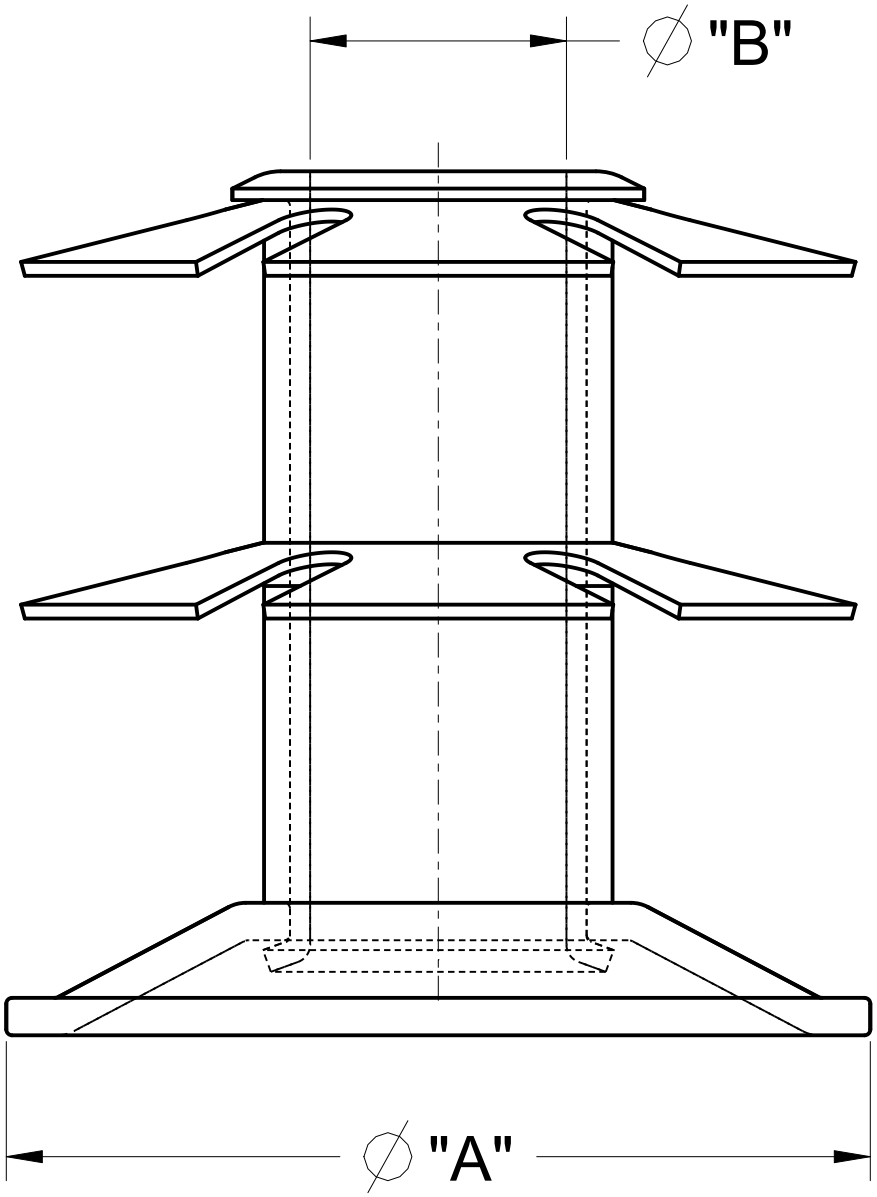
∅ "B"
∅ "A"